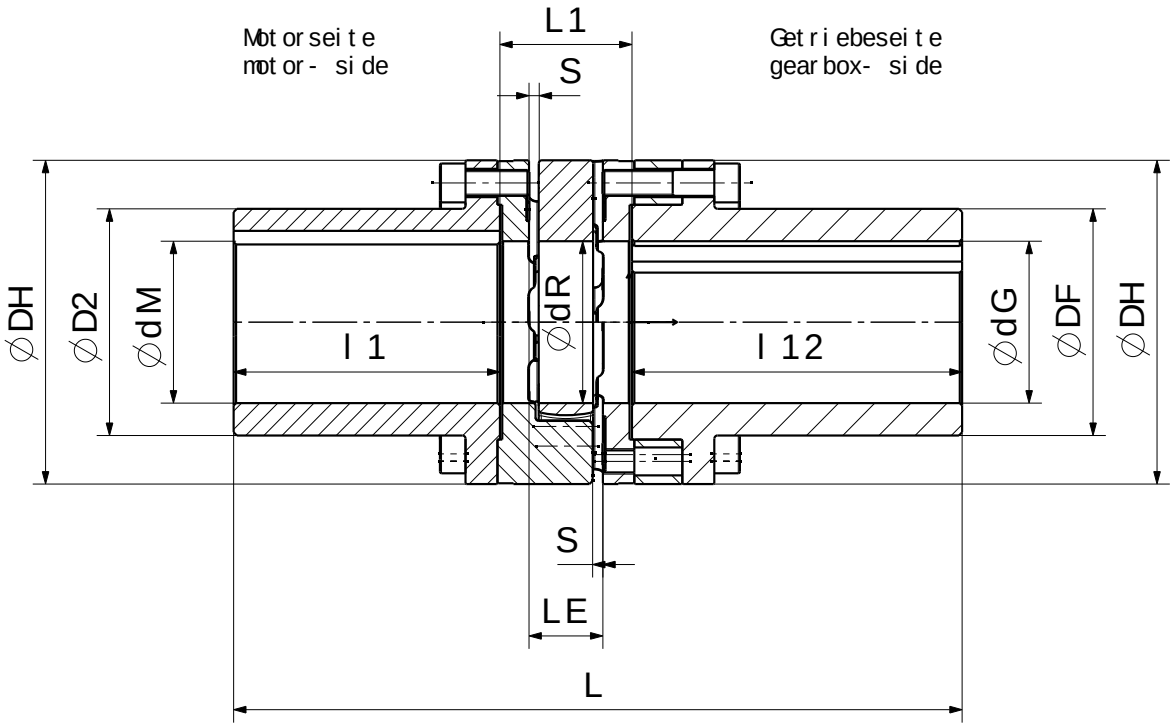

Coupling Size		AFC-65	AFC-75	AFC-90	AFC-100	AFC-110	AFC-125	AFC-140	AFC-160
T_{kn}	Nm	940	1920	3600	4950	7200	10000	12800	19200
T_{kmax}	Nm	1880	3840	7200	9900	14400	20000	25600	38400
n_{max}	rpm	3450	3250	3000	2800	2600	2250	1800	1500
ØdG/ØdM pilot bore	mm	28	28	38	48	48	58	58	78
max. bore	mm	65	75	100	110	125	145	165	190
ØDH	mm	135	160	200	225	255	290	320	370
ØD2	mm	94	108	142	158	178	206	235	270
ØDF	mm	92	108	140	158	176	206	235	270
ØdR	mm	68	80	100	113	127	147	165	190
l1	mm	113.5	133	165.5	155	203.5	200.5	247	229
l12	mm	166	166.5	206.5	206.5	212.0	212.0	252.5	252.5
lG1	mm	150	150	190	190	195	195	235	235
L1	mm	65	75	82	97	103	116	128	146
L	mm	344.5	374.5	454	458.5	518.5	528.5	627.5	627.5
LE	mm	35	40	45	50	55	60	65	75
S	mm	4.5	5	5.5	6	6.5	7	7.5	9
Cylinder bolt	Qty.	12xM10x30	15xM12x40	15xM16x40	15xM16x50	15xM20x50	15xM20x60	15xM20x60	15xM24x70
DIN912-12.9		12xM10x60	15xM12x70	15xM16x70	15xM16x80	15xM20x80	15xM20x90	15xM20x90	15xM24x100
Ma	Nm	83	120	295	295	580	580	580	1000

When selecting the coupling assembly, setting and maintenance instructions have to be observed. Other disc diameters upon request. Other dimensions upon request. Individual balancing of coupling components available upon request. Axial fixing of coupling hub possible with set- screw above the key upon request. Weight and inertia indicated for max. bore ØdG and Ø dM.