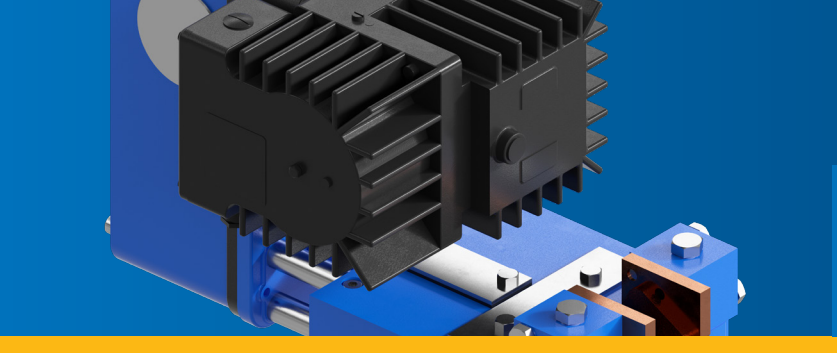

COMPACT CALIPER BRAKE

CB8-P

M 1501 381 E-EN-2015-05

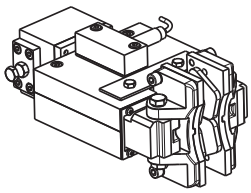

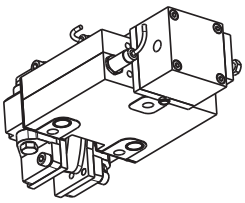

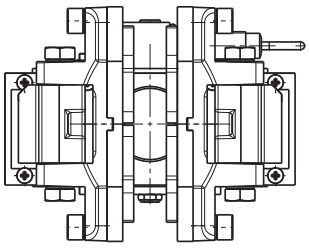

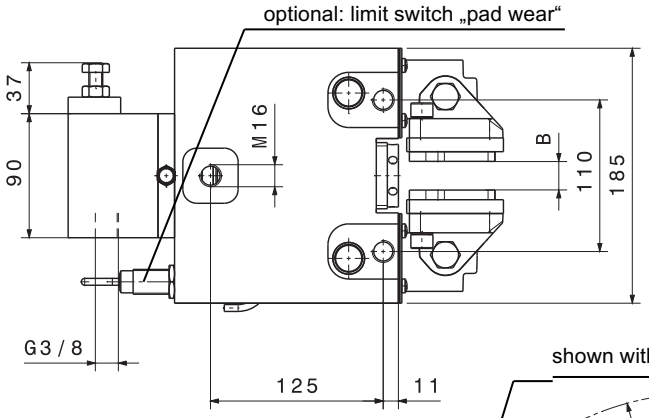

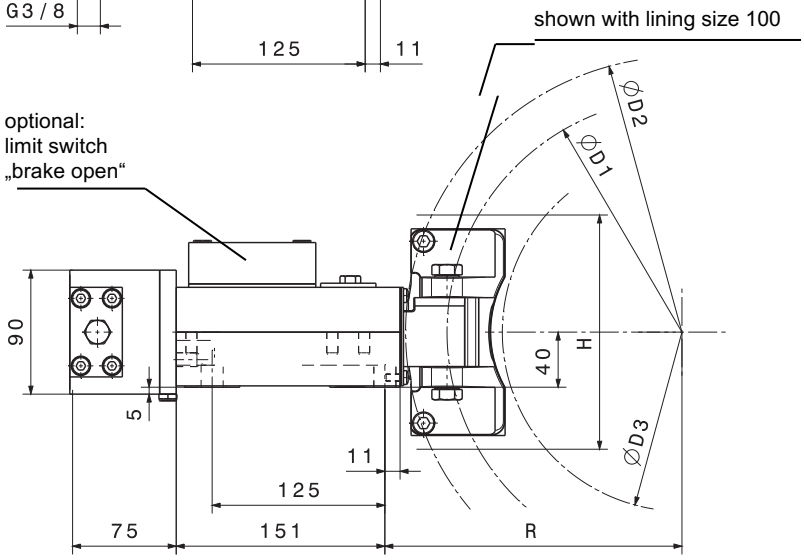

COMPACT CALIPER BRAKE CB8-P
FAIL-SAFE, PNEUMATIC RELEASE

options: manual release, sensors „open“ and „pad wear limit“, closing delay

B = disc width in mm, standard = 20 mm, optional: 12,7; 16; 25; 30

Ø D2 = outer disc diameter in mm

linings: = size 50 standard: organic (suitable for max.circumferential speed v_{max} = 35m/sec.)
= size 50 optional: Sinter
= size 100 standard: Sinter (for discs D2 ≥ Ø250)

weight = 26 kg

TECHNICAL DATA FOR INTEGRATED PNEUMATIC CYLINDER

release pressure:	6 bar
piston diameter:	80 mm
max. stroke:	13 mm

(H* for B > 25 mm)

	dimensions depending on selected lining size				
CB8-P	ØD1	ØD3	R		H (H*)
-50 (with lining size 50)	ØD2 – 46	ØD2 – 110	D2 /2 + 19,5		110 (130)
-100 (with lining size 100)	ØD2 – 60	ØD2 – 140	D2 /2 + 15		152 (170)
	braking torque in Nm (μ = 0,4) on disc-Ø D2, adjustable from / to				
	Ø 200	Ø 250	Ø 315	Ø 400	Ø 500
CB8-P-50	80-300	110-400	140-530	180-700	n.a.
CB8-P-100	n.a.	350-680	460-910	620-1220	800-1580